Harvatek Surface Mount CHIP LED Data Sheet
HT-T368FCH-XXXX

DISCLAIMER

HARVATEK reserves the right to make changes without further notice to any products herein to improve reliability, function or design. HARVATEK does not assume any liability arising out of the application or use of any product or circuit described herein; neither does it convey any license under its patent rights, nor the rights of others.

LIFE SUPPORT POLICY

HARVATEK's products are not authorized for use as critical components in life support devices or systems without the express written approval of the President of HARVATEK or HARVATEK INTERNATIONAL. As used herein:

1. Life support devices or systems are devices or systems which, (a) are intended for surgical implant into the body, or (b) support or sustain life, and (c) whose failure to perform when properly used in accordance with instructions for use provided in the labeling, can be reasonably expected to result in a significant injury of the user.

2. A critical component in any component of a life support device or system whose failure to perform can be reasonably expected to cause the failure of the life support device or system, or to affect its safety or effectiveness.

Product Specifications

	I_V	λ_D	V_F
Specification	Red : 90.0 min Green : 450.0 min Blue : 71.5 min @20mA/ Ta= 25° C	Red : 615 - 635nm Green : 515 - 535nm Blue : 460 – 476nm @20mA/ Ta= 25° C	Red : 2.4 V maximum Green : 3.9 V maximum Blue : 3.9 V maximum @20mA/ Ta= 25° C
	Specification	Material	Quantity
Ir	< 100 µA @ V_R = 5 V		
Resin	Water clear	Epoxy resin	
Carrier tape	EIA 481-1A specs	Conductive black tape	2000pcs per reel
Reel	EIA 481-1A specs	Conductive black	
Label	HT standard	Paper	
Packing bag	220x240mm	Aluminum laminated bag/ no-zipper	One reel per bag
Carton	HT standard	Paper	Non-specified

Others:

Each immediate box consists of 5 reels. The 5 reels may not necessarily have the same lot number or the same bin combinations of Iv, λ_D and Vf. Each reel has a label identifying its specification; the immediate box consists of a product label as well.

Compliance and Certification

ISO9002, QS9000 and ISO14001 Certified

RoHS Compliant

ATTENTION: Electrostatic Discharge (ESD) protection

The symbol to the left denotes that ESD precaution is needed. ESD protection for GaP and AlGaAs based chips is necessary even though they are relatively safe in the presence of low static-electric discharge. Parts built with AlInGaP, GaN, or/and InGaN based chips are **STATIC SENSITIVE devices**. ESD precaution must be taken during design and assembly.

If manual work or processing is needed, please ensure the device is adequately protected from ESD during the process.

Label Specifications

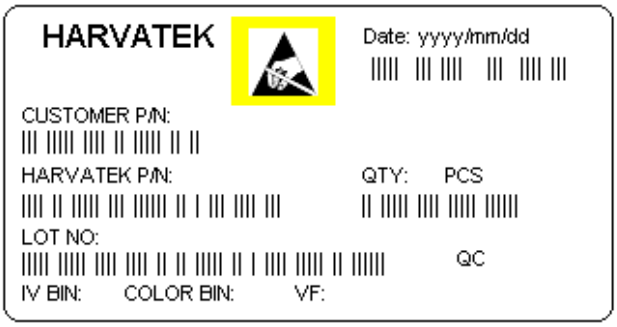

■ Harvatek P/N:

H T - T 3 6 8 FCH - X X X X

Series Name	Emitting Color	Customer Code
HT-T368 **HT: Harvatek** **T: tLED® series 3.5(L) x 2.7(W) x 1.8(H) mm** **3: 3-dice configuration** **68: PLCC4 package**	**FCH** **RGB @ 20mA per die**	**XXXX** **Customer Product Code TBD**

■ Lot No.:

1	2	3	4	5	6	7	8	9	10
P	**1**	**2**	**2**	**3**	**0**	**A**	**-**	**D**	**T**

Code 1	Code 2	Code 3	Code 4, 5	Code 6, 7	Code 9	Code 10
	Mfg. Year	Mfg. Month	Mfg. Date	Lots	Resin Color	Packaging
Internal Tracing Code	Z: 2000 1: 2001 2: 2002 3: 2003 …..	1: Jan. 2: Feb. …. 9: Sep. A: Oct. B: Nov. C: Dec.	1~31/ (30)	01~99, A,B,C…	C: Clear D: Milky White	T: Tape & Reel

Luminous Intensity (Iv) Bin:

Color	Bin Code	Spec. Range (mcd)
Red	R	112.5 – 180.0
	S	180.0 – 285.0
	T	285.0 – 360.
Green	V	450.0 – 560.0
	W	560.0 – 715.0
	X	715.0 – 900.0
Blue	Q	71.5 – 90.0
	R	112.5 – 180.0
	S	180.0 – 285.0

Dominant Wavelength (λ_D) Bin:

Color	Bin Code	Spec. Range (nm)
Red	-	615.0 – 630.0
Green	A	515.0 – 520.0
	B	520.0 – 525.0
	C	525.0 – 530.0
	D	530.0 – 535.0
Blue	A	460.0 – 464.0
	B	464.0 – 468.0
	C	468.0 – 472.0
	D	472.0 – 476.0

Forward Voltage (Vf) Bin:

Color	Bin Code	Spec. Range
Blue (NB) Green (NG)	G8	2.7-2.9 V
	H7	2.9-3.1 V
	H8	3.1-3.3 V
	J7	3.3-3.5 V
	J8	3.5-3.7 V
	K7	3.7-3.9 V
Red (USD)	H18	1.6-2.4 V

Product Features

Electro-Optical Characteristics

(I_F @ 20mA, T_a = 25 °C)

Code for parts	Lighting Color		V_F(V)		λ (nm)			I^*_V(mcd)
			typ	max	λ_D	λ_P	△λ	Typical
HT-T368FCH	Ultra Bright Red	USD	1.9	2.4	624	630	17	150
	Green	NG	2.7	3.9	525	520	40	700
	Blue	NB	2.7	3.9	470	468	26	100

Package Outline Dimension and Recommended Soldering Pattern for Reflow Soldering

Unit: mm Tolerance: +/-0.1

Outline Dim.

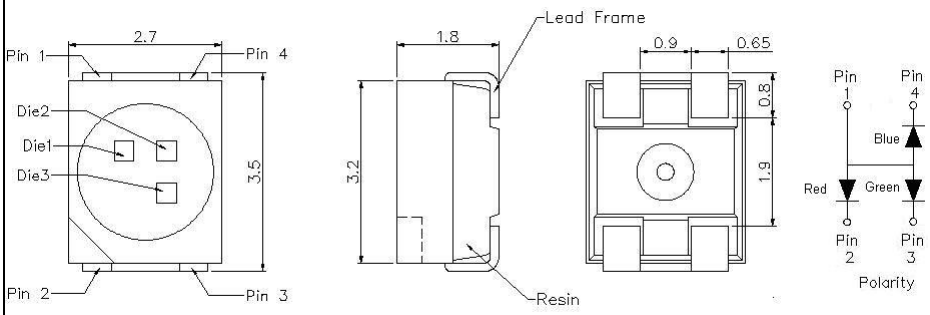

Soldering Pattern

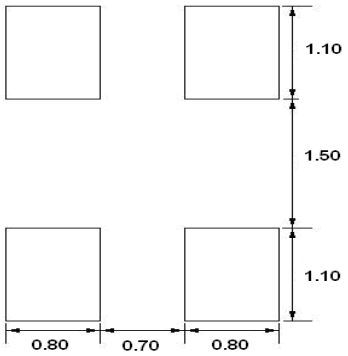

Soldering terminals may shift in the x, y direction.

Absolute Maximum Ratings

(T_a 25 °C)

Series	P_d (mW)	I_F (mA)	I_{FP} (mA)	V_R (V)	I_R (uA)	T_{OP} (°C)	T_{ST} (°C)
Red	46	20	100	5	<100@ V_R = 5	-30~+80	-40~+85
Blue/Green	74	20	80				

** Condition for I_{FP} is pulse of 1/10 duty and 0.1msec width

Characteristics Curves

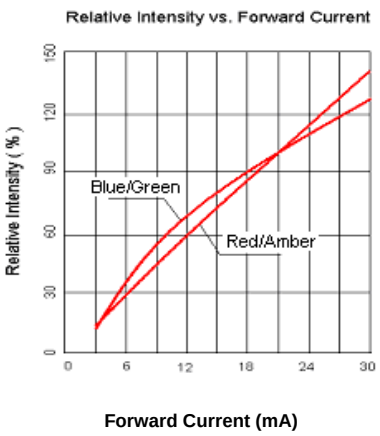

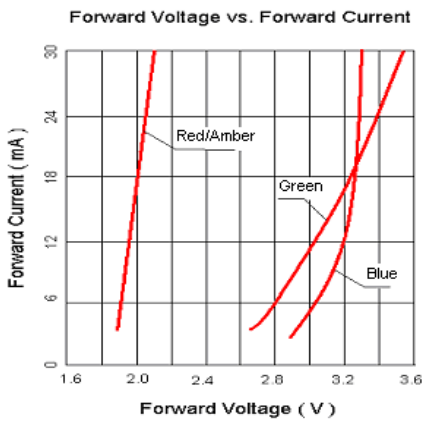

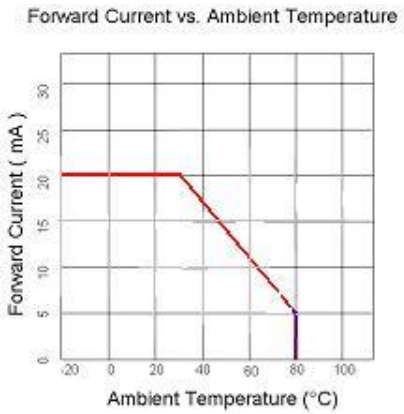

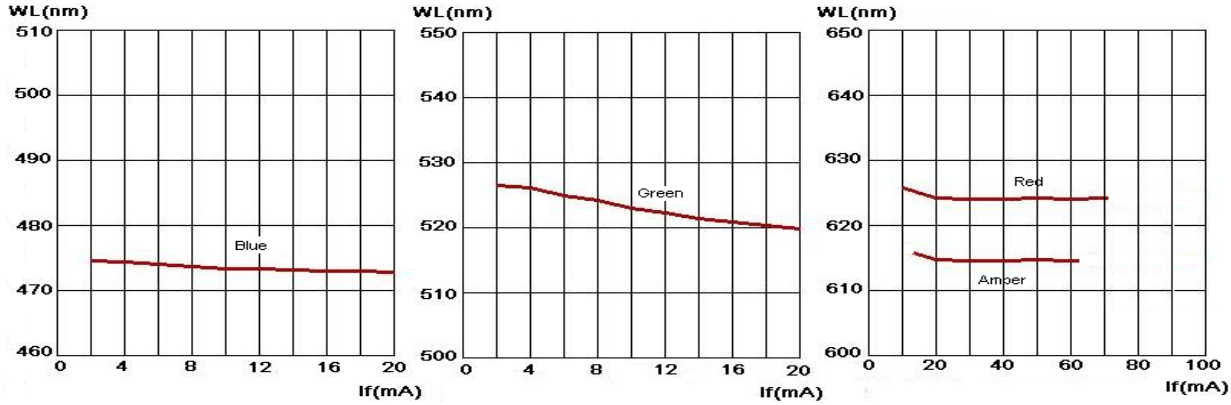

Wavelength vs. Forward Current

Directive Characteristics

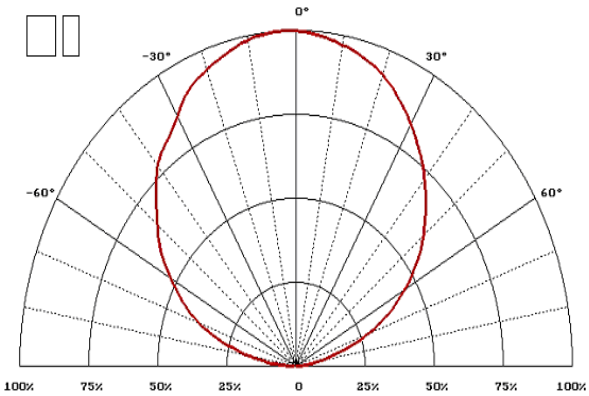

Directive Characteristics

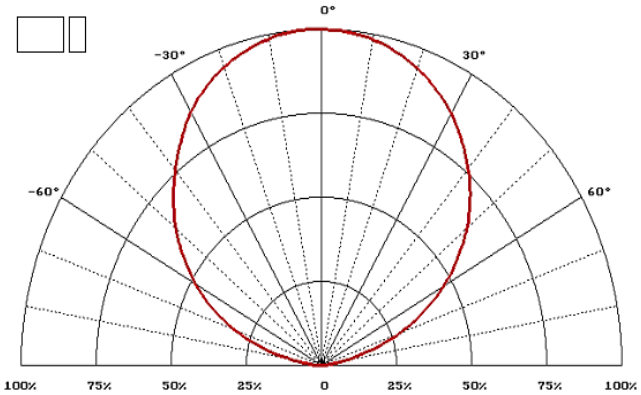

Packaging

Tape Dimension

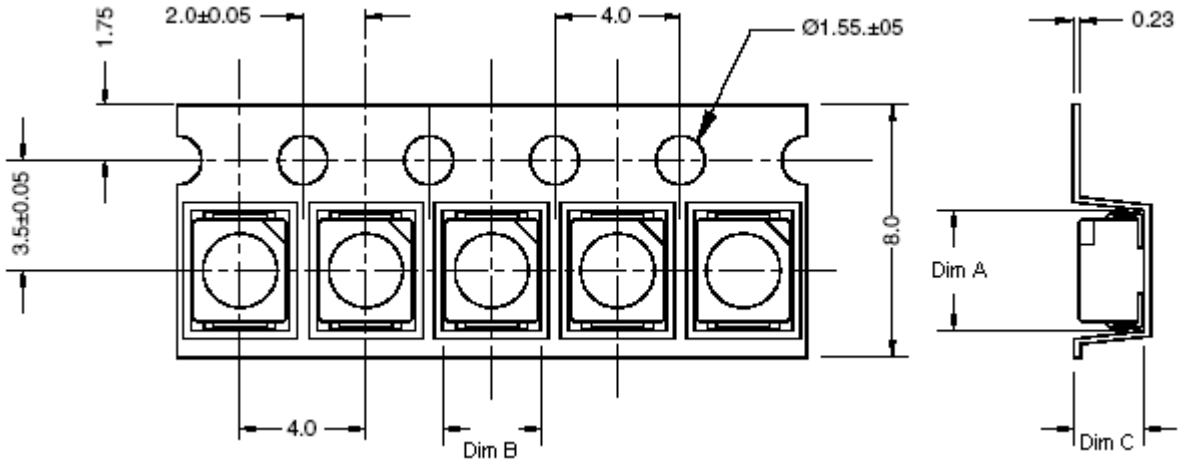

Part No.	Dim. A	Dim. B	Dim. C	Q'ty/Reel
HT-TX68	3.73±0.10	2.95±0.10	2.12±0.05	2K

Unit: mm

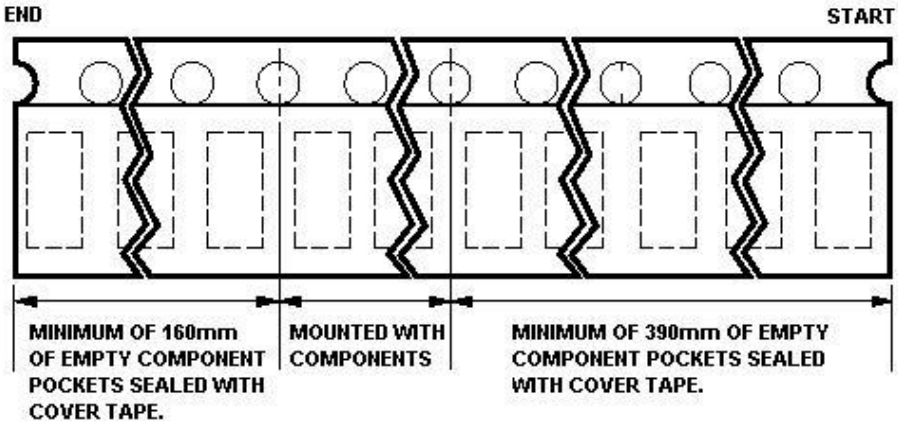

Reel Dimension

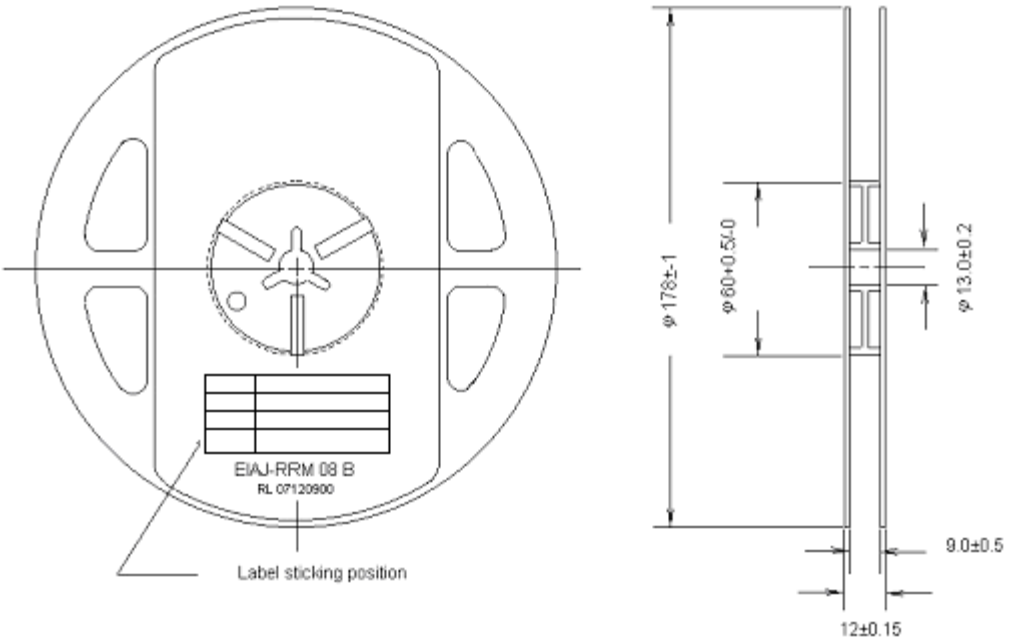

Packing

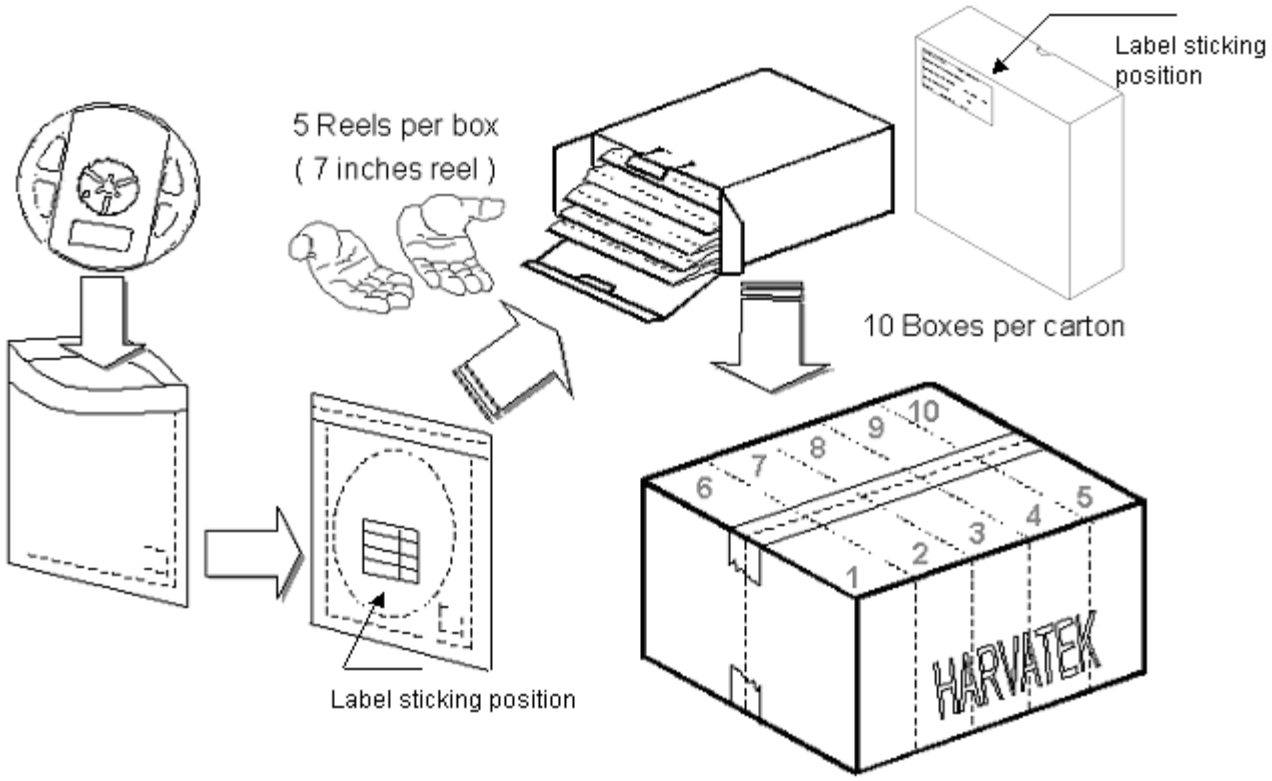

5 boxes per carton is available depending on shipment quantity.

Dry Pack

All SMD optical devices are **MOISTURE SENSITIVE**. Avoid exposure to moisture at all times during transportation or storage. Every reel is packaged in a moisture protected anti-static bag. Each bag is properly sealed prior to shipment.

Upon request, a humidity indicator will be included in the moisture protected anti-static bag prior to shipment.

The packaging sequence is as follows:

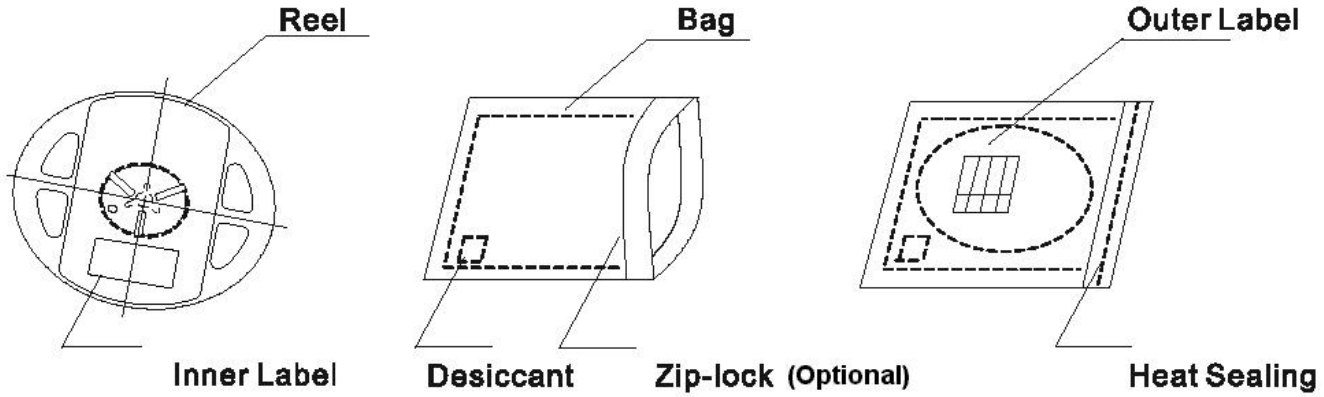

PRECAUTIONS

1. Avoid exposure to moisture at all times during transportation or storage.
2. Anti-Static precaution must be taken when handling GaN, InGaN, and AlInGaP products.
3. It is suggested to connect the unit with a current limiting resistor of the proper size. Avoid applying a reverse voltage beyond the specified limit.
4. Avoid operation beyond the limits as specified by the absolute maximum ratings.
5. Avoid direct contact with the surface through which the LED emits light.
6. If possible, assemble the unit in a clean room or dust-free environment.

Reflow Soldering

- Recommended tin glue specifications: melting temperature in the range of 178~192 ^{O}C
- The recommended reflow soldering profile is as follows (temperatures indicated are as measured on the surface of the LED resin):

Lead Solder Profile

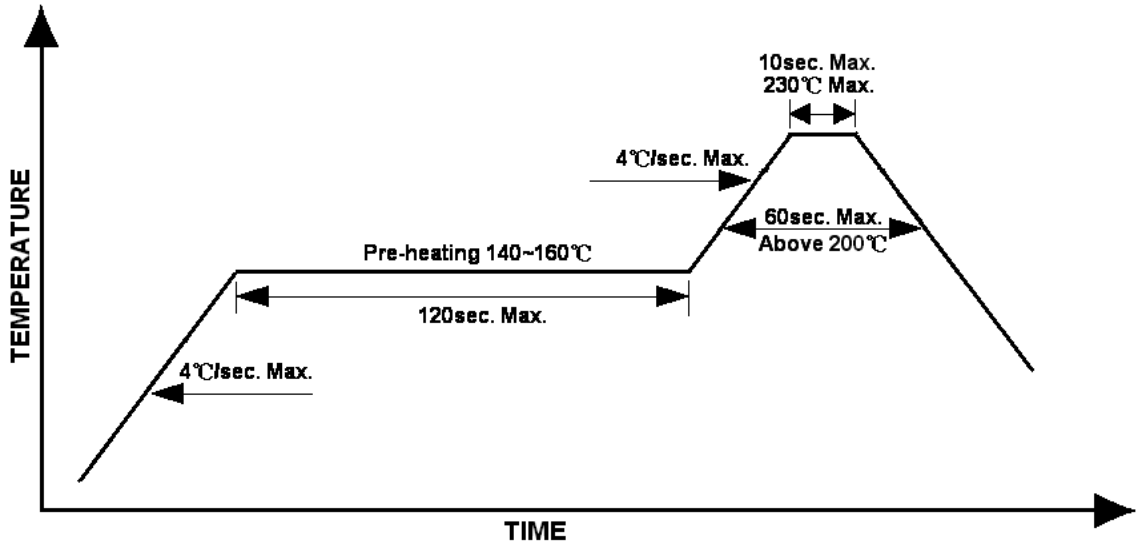

Lead-free Solder Profile

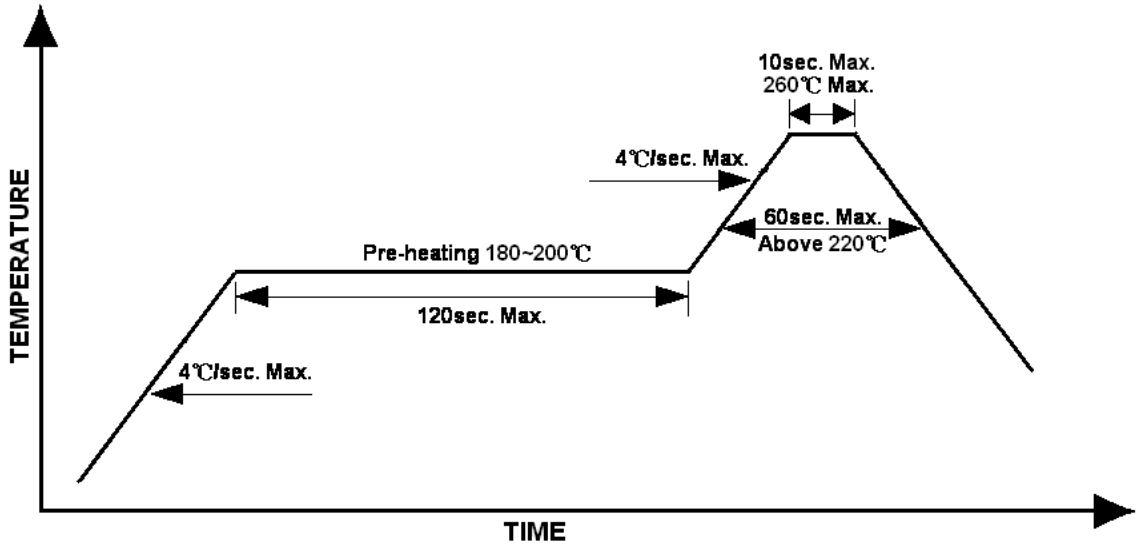

Reworking

- Rework should be completed within 5 seconds under 260 ^{O}C.
- The iron tip must not come in contact with the copper foil.
- Twin-head type is preferred.

Cleaning

Following are cleaning procedures after soldering:

- An alcohol-based solvent such as isopropyl alcohol (IPA) is recommended.
- Temperature x Time should be 50°C x 30sec. or <30°C x 3min
- Ultra sonic cleaning: < 15W/ bath; bath volume ≤ 1liter
- Curing: 100 ^{O}C max, <3min

Cautions of Pick and Place

- Avoid stress on the resin at elevated temperature.
- Avoid rubbing or scraping the resin by any object.
- Electric-static may cause damage to the component. Please ensure that the equipment is properly grounded. Use of an ionizer fan is recommended.

Application Note for Handling of Cover Tape

When cover tape was removed from carrier tape during pick and place process, PSA cover tape adhesive may incur build up on the feeder track, gear or even inside the trash box. (As long as equipment part that has contact with the cover tape during removal process).

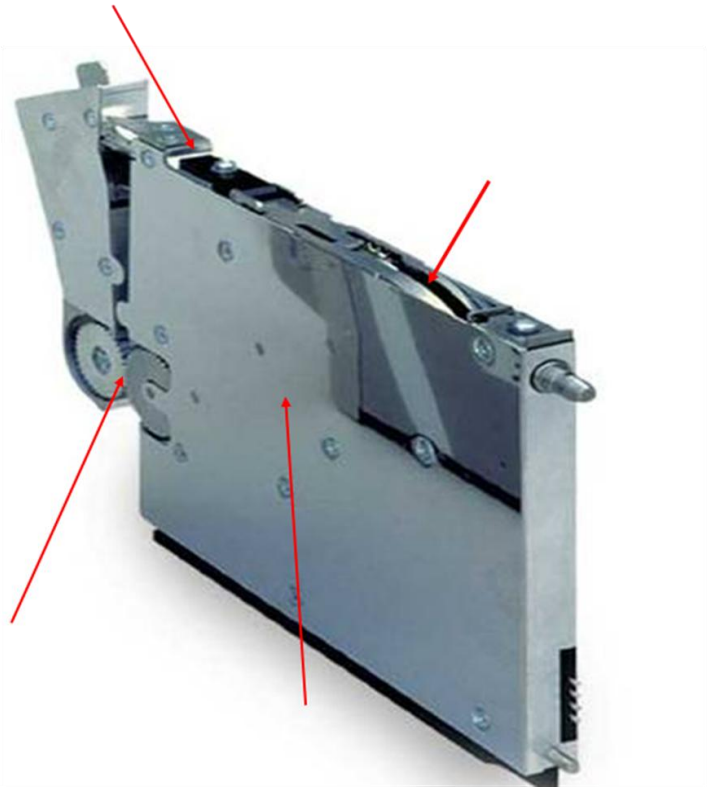

1) 3M Adhesive Remover can be used to remove adhesive effectively
2) 3M 5490 PTFE film is recommended to be applied on the part that is in contact with the PSA cover tape adhesive.

PS: For more detail application instruction, 3M requests a close up picture at the feeders portion as indicated with red arrow. Please take picture when the tape is put on with cover tape removal from the tape.

Revision History

Changes since last revision	Page	Version No.	Revision Date
New format		1.0	01-03-2007
Add Application Note	15	1.1	08-13-2008
Update all binning information	6, 7	1.2	08-31-2009